好手机电科技有限公司

HAO SHOU

HS-22030

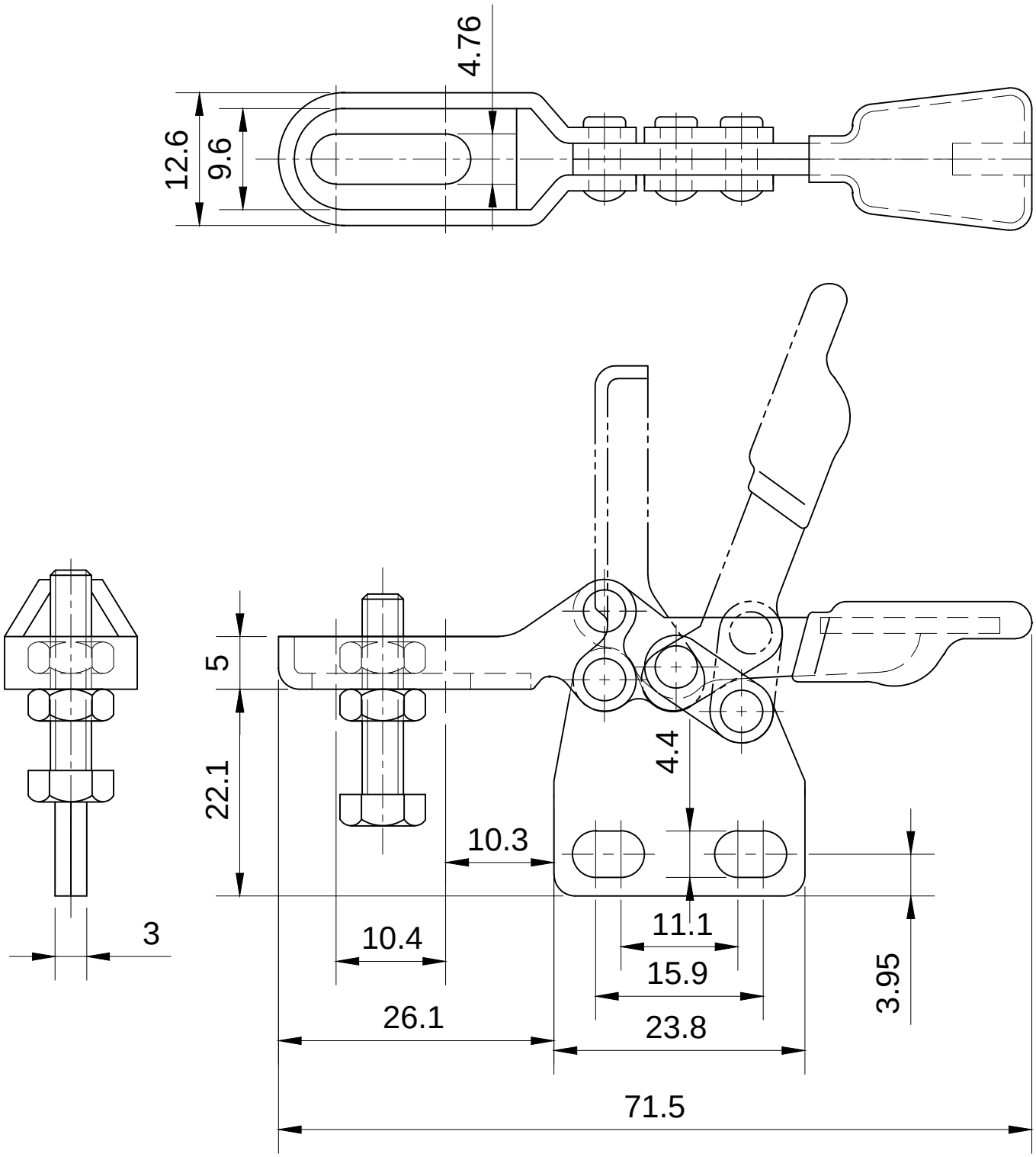

BAR OPENS:90°

HANDLE OPENS:60°

SPINDLE SUPPLIED:HS-SA-08034