好手机电科技有限公司

HAO SHOU

HS-72430A

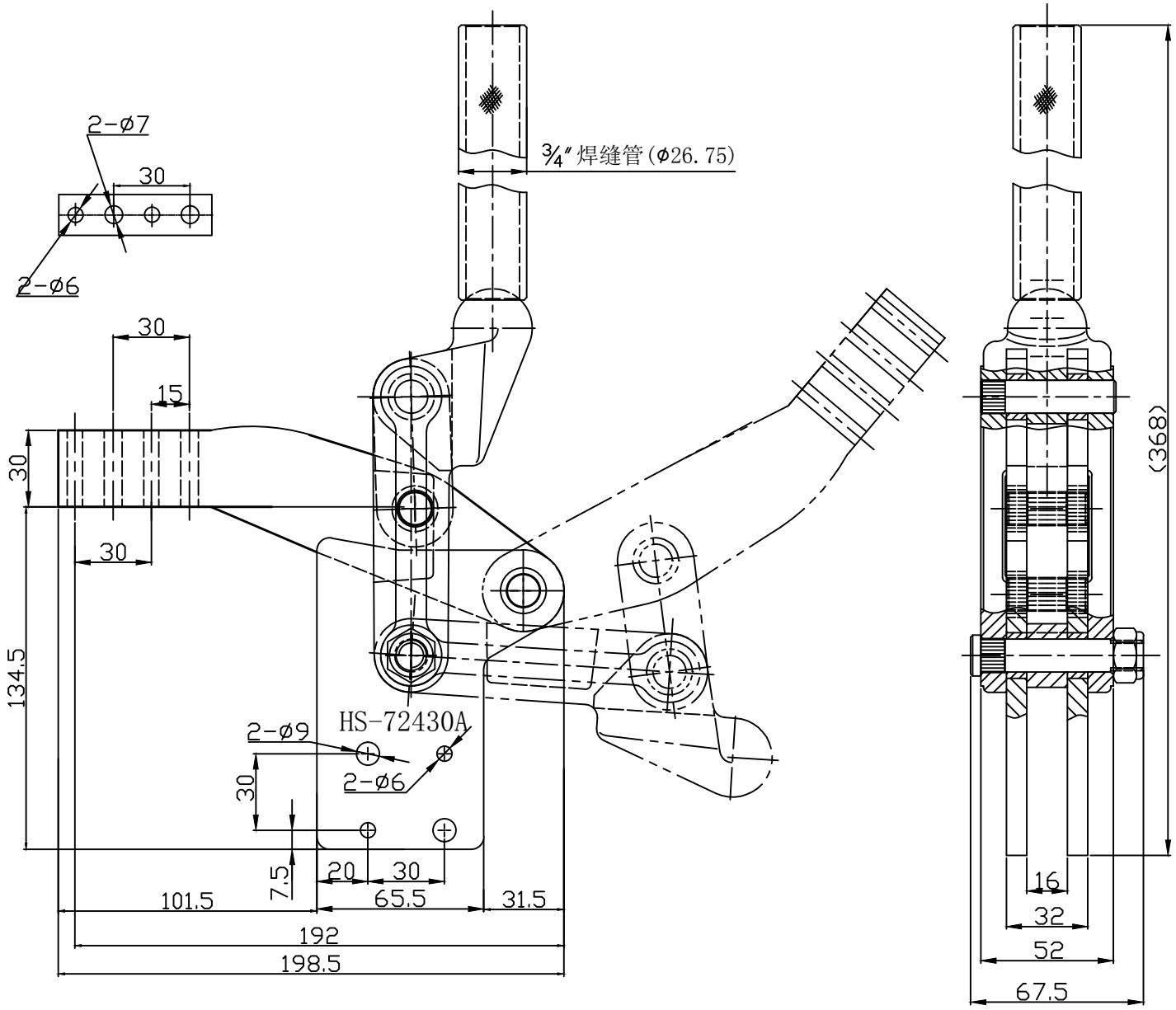

HANDLE OPENS 128°

BAR OPENS 200°